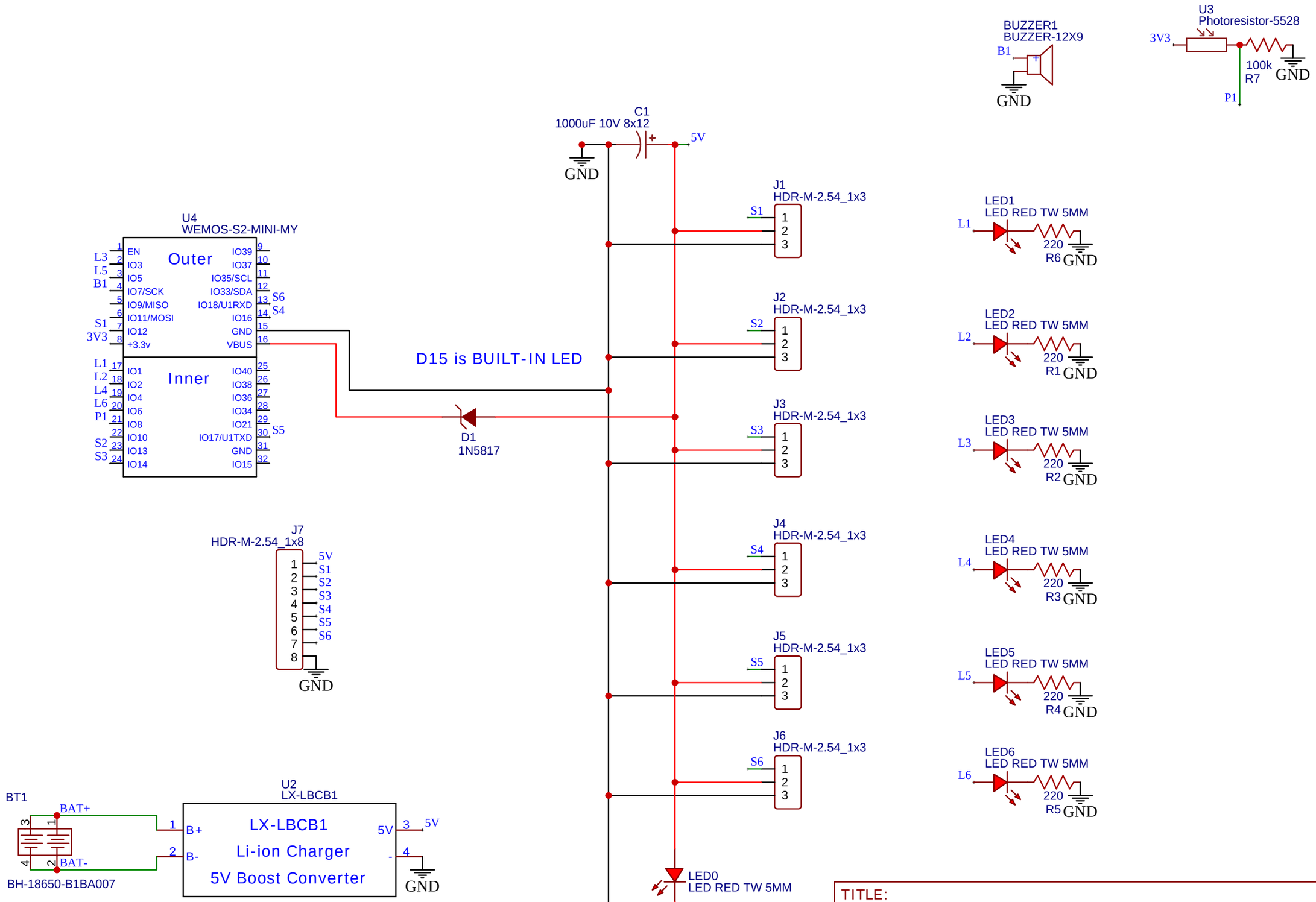

TITLE: ESP32 S2 Mini Power Board	REV: 1.0
AuroraCORE	Company: billyhau.hk
	Sheet: 1/1
	Date: 2025-09-13 Drawn By: Billy Hau